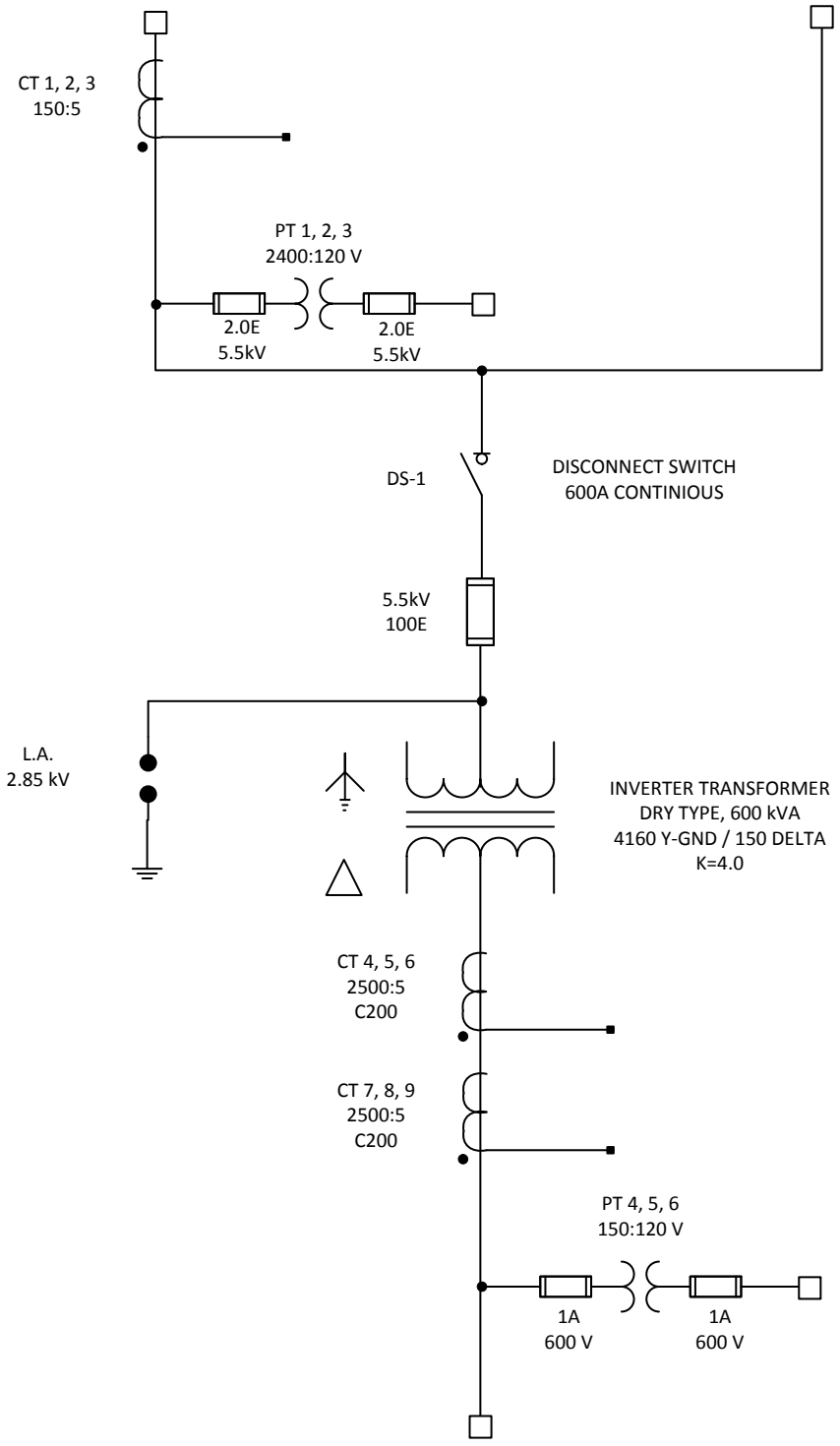
CT 1, 2, 3
150:5
PT 1, 2, 3
2400:120 V
2.0E
5.5kV
2.0E
5.5kV
DS-1
DISCONNECT SWITCH
600A CONTINIOUS
5.5kV
100E
L.A.
2.85 kV
INVERTER TRANSFORMER
DRY TYPE, 600 kVA
4160 Y-GND / 150 DELTA
K=4.0
CT 4, 5, 6
2500:5
C200
CT 7, 8, 9
2500:5
C200
PT 4, 5, 6
150:120 V
1A
600 V
1A
600 V

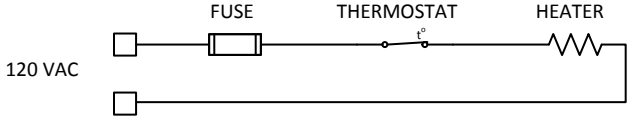
FUSE
THERMOSTAT
HEATER
120 VAC