NOTES:
1. UNLESS OTHERWISE SPECIFIED:
   a) RESISTANCE IS IN OHMS, ±5%, 1/8W.
   b) CAPACITANCE IS IN μF.

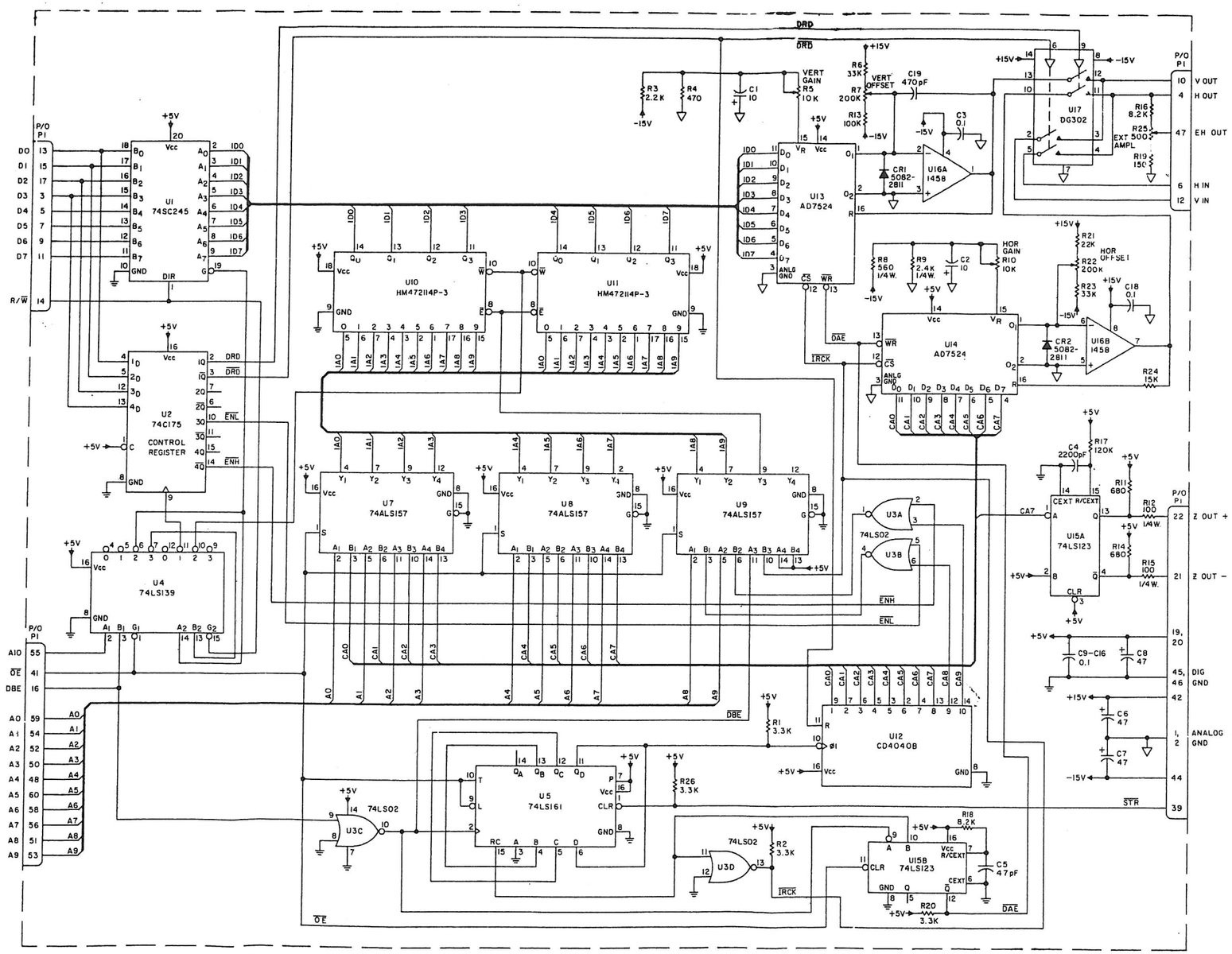

Figure C-2. Type 796217-1, Digital Refresh Display (DRD) Schematic Diagram 580165 (E)